Epoxy Roller Runners

15007 EPOXY SLIDE

* 400 mm pictured

- Material: steel
- Closing: self-close
- Opening: single extension
- Screwing: bottom-mount with screws
- Color: epoxy powder coated
- Packing: set or industrial
- Loading: 15 kg for 0.8 mm material thickness
  25 kg for 1.2 mm material thickness
- POM roller with 18.5 mm or 19 mm

Note: Hole pattern printed represents our prototype and there are more options. It might have been altered according to our customer's needs. Dimensions in mm

Installation guide

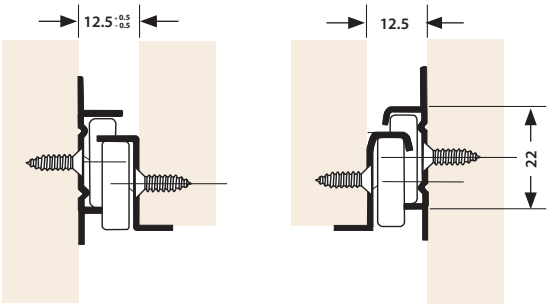

Fixing dimension on the cabinet

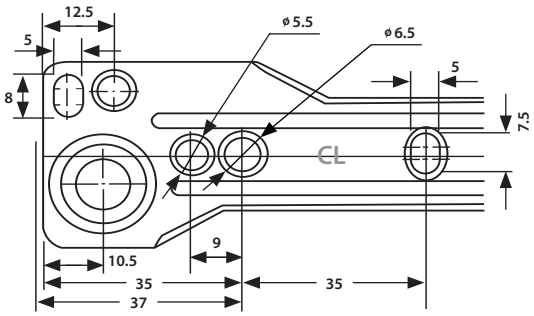
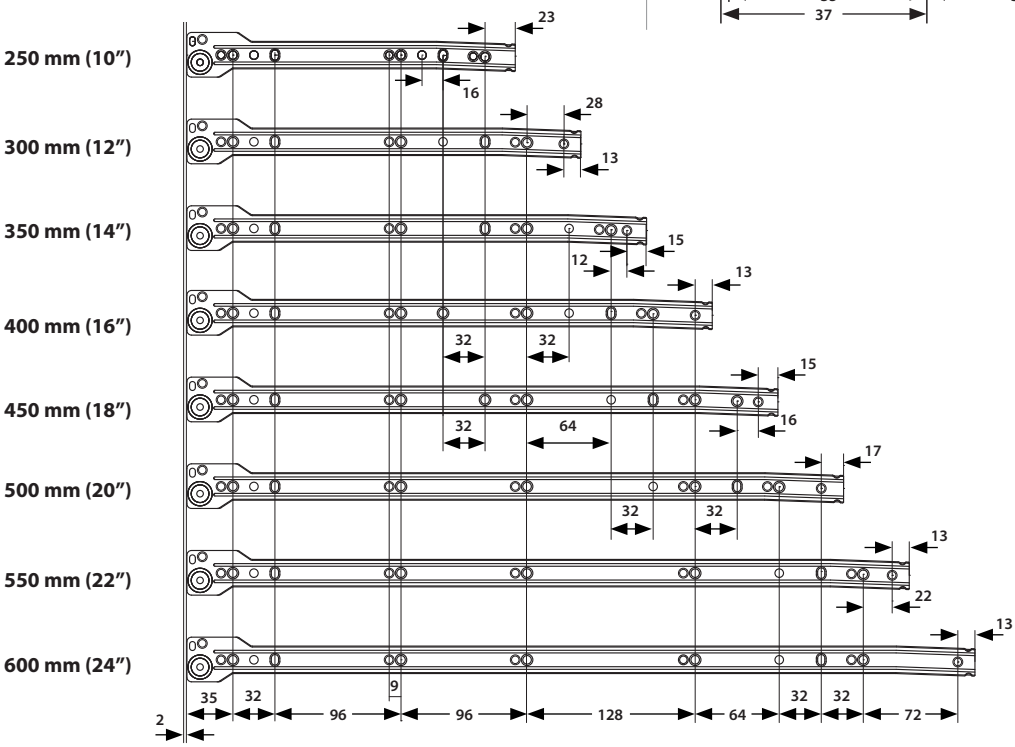
Drilling pattern